HIGHER SCHOOL OF COMMUNICATION OF TUNIS

Scope of statement

Fire Detection System

Author:
Flihi Arij
Sadkaoui Marwa

Instructor:
Mohamed-Bécha KAÂNICHE

November 1, 2022

Contents

1 Introduction **2**

2 Functionalities and Components **2**
2.1 Sensors and IoT network 3
2.2 Mobile application 4

3 Technologies **4**

4 Architecture **6**

5 Timeline **6**

6 Delivrables **7**

7 Business Study **7**

8 Marketing study **9**

List of Figures

1 Kitchen fire detection system 2
2 Fire detection device architecture 4
3 Fire detection application architecture 6
4 Business model 7
5 SWOT 8
6 4P Marketing study 9
7 4C Marketing study 9

1 Introduction

In this chapter, we start by explaining the problem, then we detail the proposal we detail the proposed solution. Finally, we synthesize by a conclusion.

Today, the security of spaces (closed and open) and of individuals has become unavoidable, as they are exposed to many dangers. Among these dangers, we can mention the fires, which cause material losses and damage the human life.

To minimize these losses of this danger, we must be able to detect the fires at an early stage using the technologies of the Internet of Things, taking into account several factors that can facilitate the detection phase.

In the case of a kitchen, we can see that gas and flame are important factors that can identify the fire.

We propose a system which must answer the following use cases:
- Smoke detection: this task requires a smoke gas sensor with a well determined threshold.
- flame detection: this task requires a flame sensor with a well determined threshold.
- Alert in case of fire detection (either by gas or by flame) by a buzzer and a notification on the progressive web application (PWA).

Figure 1: Kitchen fire detection system

2 Functionalities and Components

In this section, a detail of the functionalities of the project. We can split the functionalities into two parts: The first one details the sensors and the network, and the second is the details of the mobile application used to control the appliances.

In this part of the project, we aim to work with sensors to make an intelligent fire detection.

- A smoke gas sensor that detects the level of gas (MQ2 Smoke Sensor) in the air.
- A IR sensor that detects the flame.

These sensors will be implemented on the ESP32 along with the LED and a buzzer, and at this stage we distinguish several cases:
- If there is an excess of smoke in the air, the LED turns ON and the buzzer rings.
- If there is a flame, the LED turns ON and the buzzer rings.
- If both of the above conditions are met, the LED turns ON and the buzzer rings.

2.1 Sensors and IoT network

The description of the working environment and the results achieved in order to realize our system.

- Raspberry Pi 3 - Model B - ARMv8 With 1G RAM:
The Raspberry Pi 3 is the third generation Raspberry Pi. It replaced the Raspberry Pi 2 Model B in February 2016. Raspberry Pi 3 is the first board to have a 64-bit quad-core processor of the Raspberry Pi family. The 64-bit quad-core 1,2GHz ARM Cortex A53 chip allows the board to almost double the performance of the Raspberry Pi 2.

- ESP32-DevKitC:
ESP32-DevKitC is a small-sized ESP32-based development board. Built around the ESP-WROOM-32. It features a Wi-Fi and Bluetooth combo set, alongside optimized pinout to enable prototyping on a breadboard.

- Smoke Gas sensor MQ2:
Is SnO2, whose conductivity is lower in clean air. It makes the detection by the high and low temperature cycle method, and detects CO when the temperature is low. The conductivity of the sensor is more high as the gas concentration increases. At high temperature, it detects methane, propane.

- IR sensor: A flame detector is a type of sensor capable of detecting and reacts to the presence of a flame.

-LED: The LED in this project will indicate the state of the irrigation system.

- Buzzer:
A buzzer is an electromechanical or piezoelectric element which produces a characteristic sound when a voltage is applied to it: the beep.

- Mini push button:
The mini push-button is a small and cheap single pole single through switch (SPST) that can be soldered on a PCB. Usually used as a reset button, this push button closes a circuit when you press on it. It is rated at 50mA.

In this part, we are going to explain the different part of the device architecture represented in the figure below:

-The buzzer is linked to an NPN transistor in order to amplify the electrical signal.

-The LED in this project will indicate the state of the irrigation system. If the LED in ON, we need to turn on the irrigation system, then we need to turn it off.

-The push button is used to control the LED.

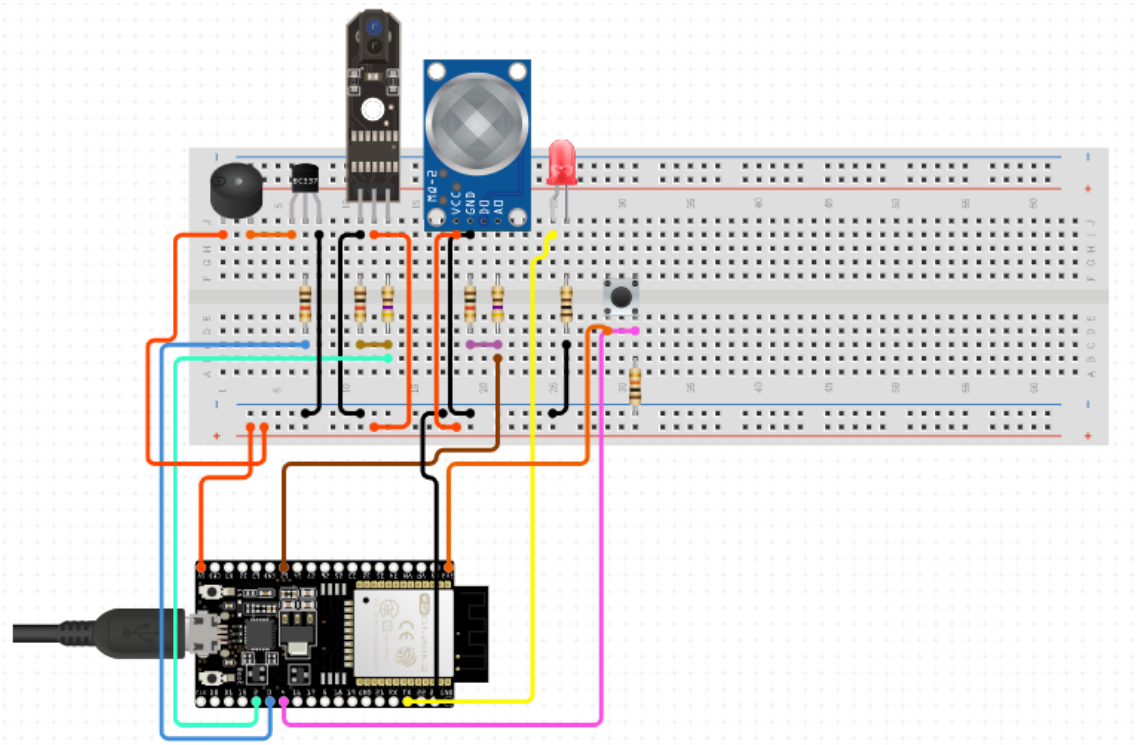

Figure 2: Fire detection device architecture

2.2 Mobile application

- A progressive web app (PWA) is a website that looks and behaves as if it is a mobile app. PWAs are built to take advantage of native mobile device features, without requiring the end user to visit an app store, make a purchase and download software locally. - The progressive web application is the interface between the IOT system and the user.Also, it gives you access to the status of the sensors and actors in real-time and controls the system from long distance.

- The progressive web application is developed using Vanilla JS.

3 Technologies

In this chapter, the technologies wich are used for the implementation of the fire system detection are mentionned.

FrontEnd

Vanilla JS:
Vanilla JavaScript Vanillin. Vanilla JS is a fast, lightweight, cross-platform framework for

building incredible, powerful JavaScript applications

BackEnd

- MongoDB:
MongoDB is a document database used to build highly available and scalable internet applications. With its flexible schema approach, it's popular with development teams using agile methodologies.

- MQTT:
MQTT is an OASIS standard messaging protocol for the Internet of Things (IoT). It is designed as an extremely lightweight publish/subscribe messaging transport that is ideal for connecting remote devices with a small code footprint and minimal network bandwidth. MQTT today is used in a wide variety of industries, such as automotive, manufacturing, telecommunications, oil and gas, etc.

- Node RED:
Node-RED is a programming tool for wiring together hardware devices, APIs and online services in new and interesting ways. It provides a browser-based editor that makes it easy to wire together flows using the wide range of nodes in the palette that can be deployed to its runtime in a single-click.

MidleWare

- WildFly:
WildFly is a powerful, modular, lightweight application server that helps you build amazing applications.

- Jakarta:
Jakarta Enterprise Edition (EE) is the open source future of cloud native enterprise Java. Protect your investments in Java EE and modernize your enterprise.

4 Architecture

In this chapter, an explanation of the architecture of the fire detection system is resumed in the next figure.

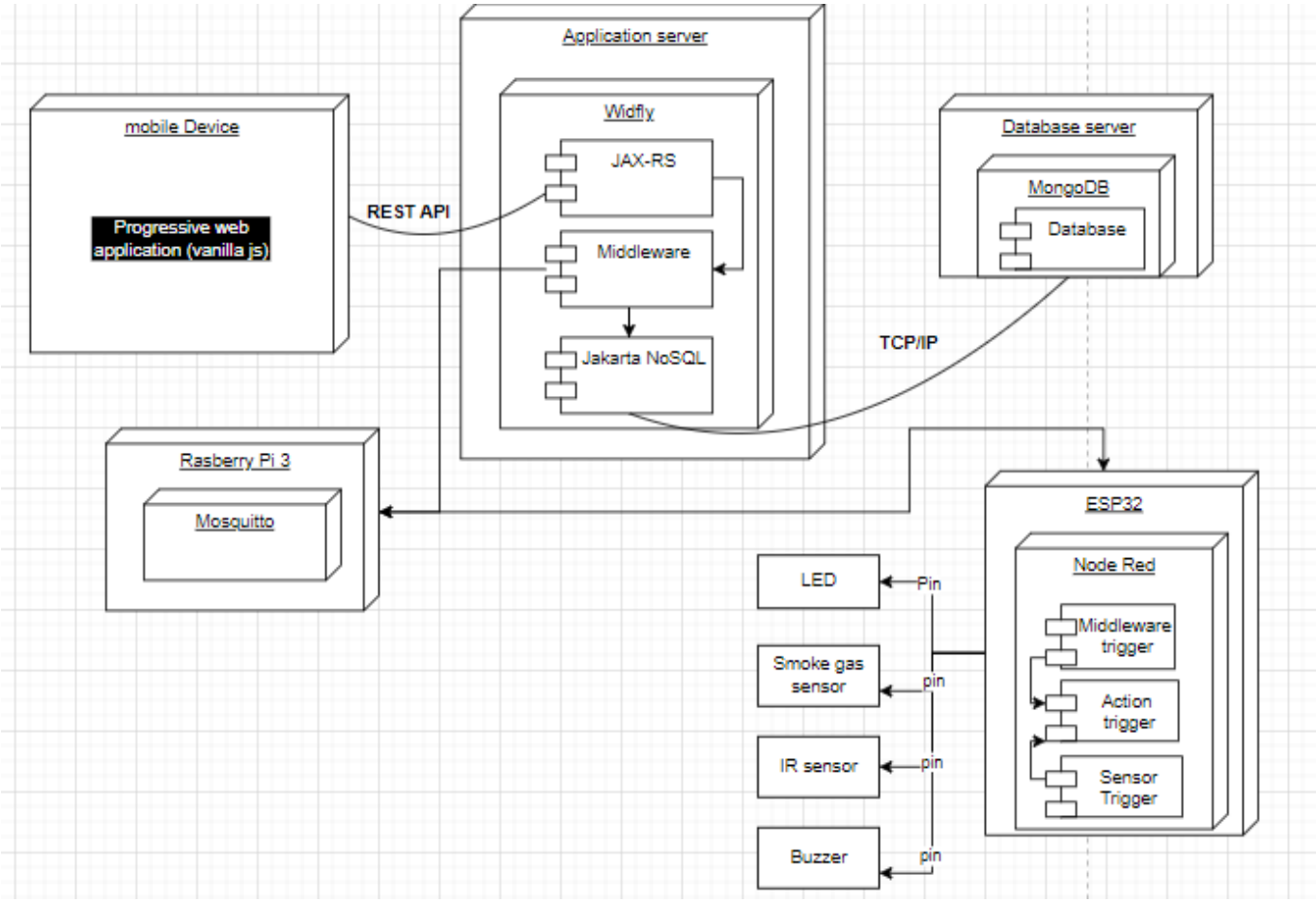

Figure 3: Fire detection application architecture

5 Timeline

In order to fulfill all the tasks and deliver the final project at time, this is the detailed timeline:

- Architecture, design and prototype.
- Connecting iot devices to cloud MQTT broker.
- Creating the database using the data collected from the iot devices.
- Creating our APIs necessary for the project.
- Developing the frontend using vanilla JS.
- Testing the features implemented and validating.
- Deployment of the application on NETLIFY.
- Documentation and creating a user guide.

6 Delivrables

At the end of this project we will be rending the following deliverables:

- Scope of statement.
- Design document.
- Fire detection system progressive web application system.
- User guide.
- Source code committed on GitHub.

7 Business Study

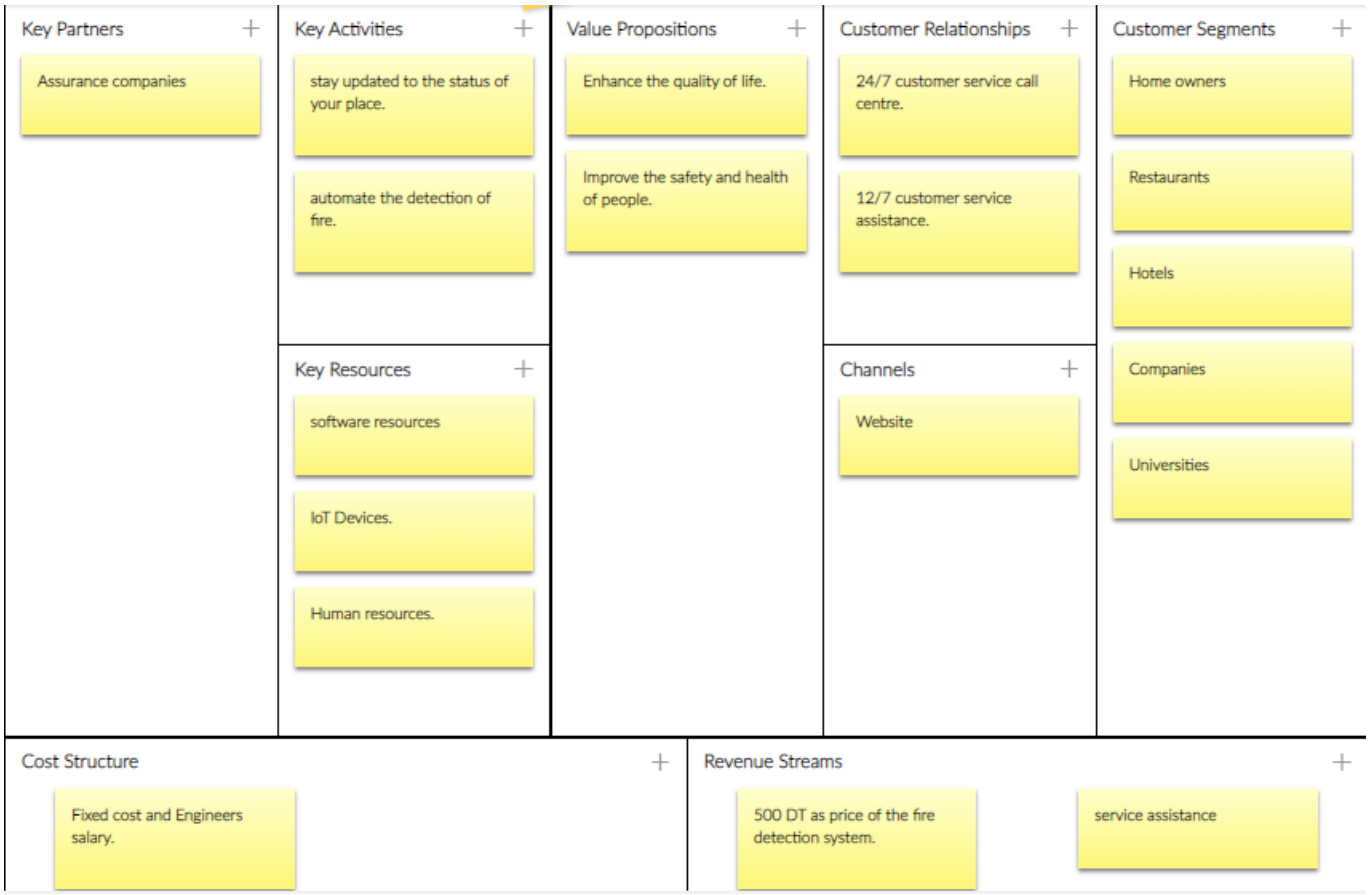

Figure 4: Business model

SWOT analysis is a framework for identifying and analysing an organization's strengths, weaknesses, opportunities and threats. Starting with our strengths, which are:

-The ability to control the fire detection system at a large distance using a mobile application.
-This system is used in a simple way.
-Using this system, we can detect the fire at an early stage.

For the opportunities:
-we can provide personalized services depending on the client's needs.
-We can take advantage of the technology evolution to improve our system performance.

Let's move to the weakness, which are:
-There is one problem that we can face, which is the low battery of the system.

Finally, the threat of your project:
-In this project we can face a concurrence problem, for that raison it is a primordial thing to be up-to-date and to follow the new technologies in order to offer innovative services.

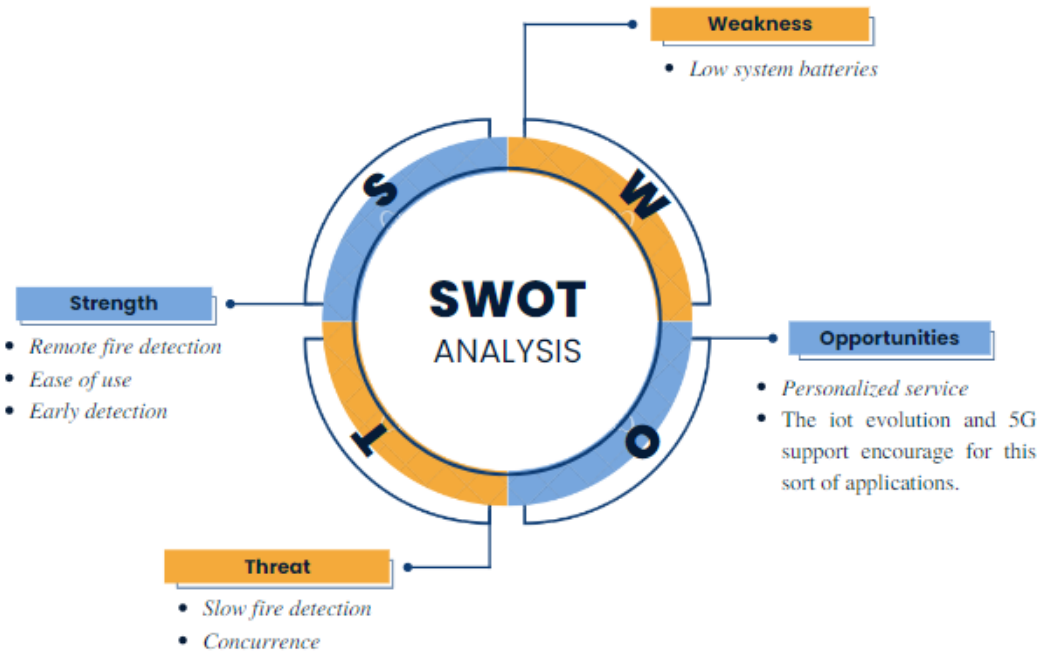

Figure 5: SWOT

8 Marketing study

Figure 6: 4P Marketing study

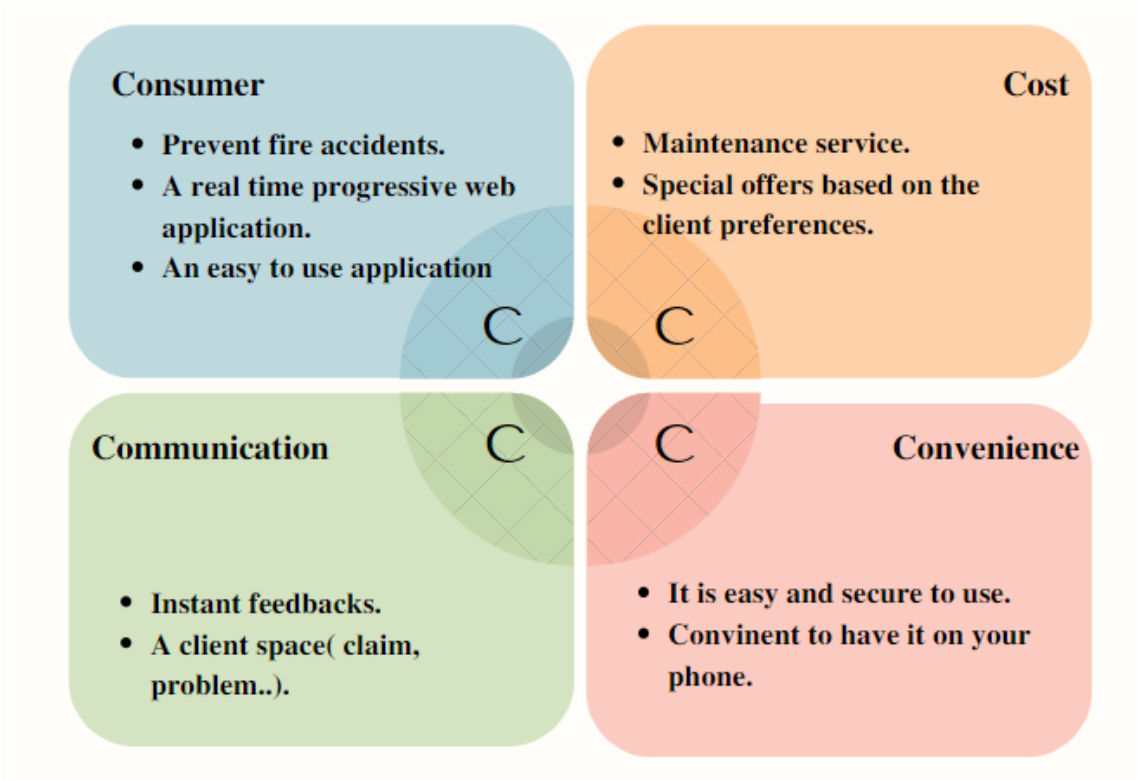

Figure 7: 4C Marketing study